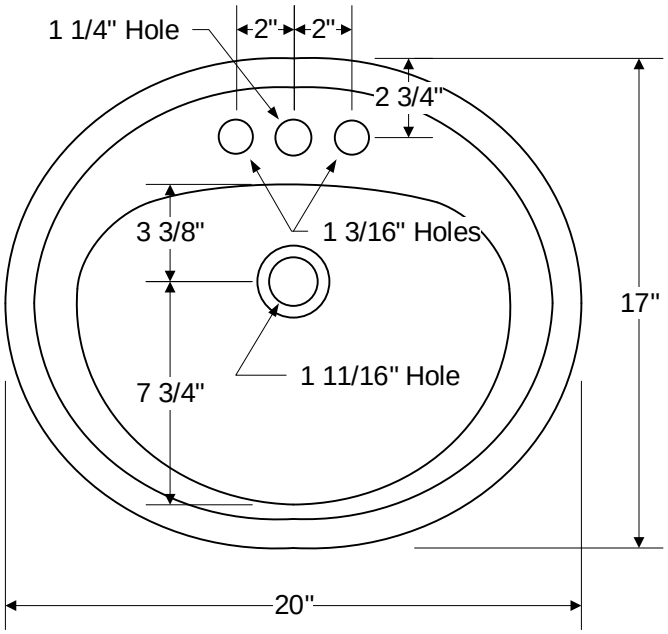
1 1/4" Hole
2"
2"
2 3/4"
3 3/8"
1 3/16" Holes
17"
1 11/16" Hole
7 3/4"
20"

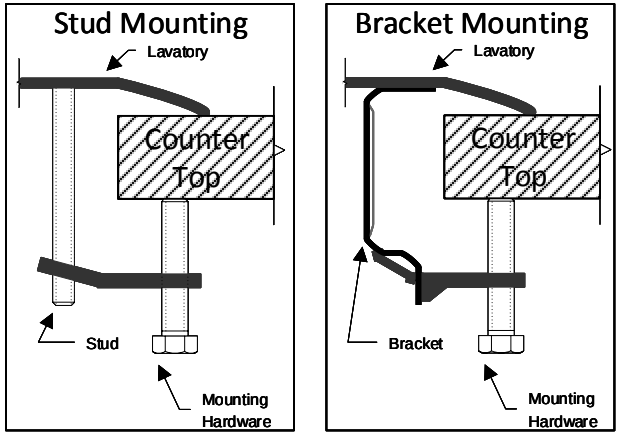
Stud Mounting
Lavatory
Counter Top
Stud
Mounting Hardware
Bracket Mounting
Lavatory
Counter Top
Bracket
Mounting Hardware

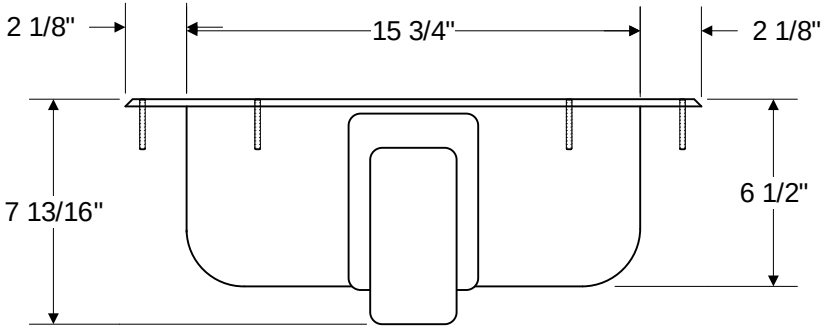
2 1/8"
15 3/4"
2 1/8"
7 13/16"
6 1/2"

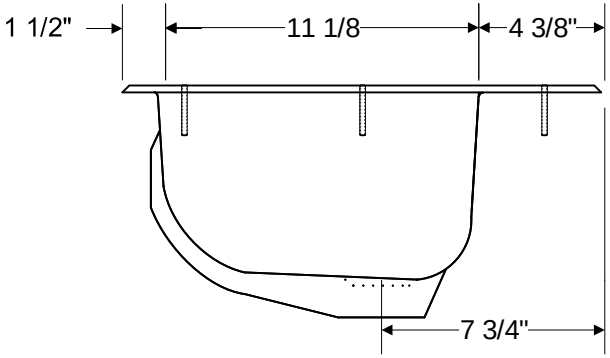
1 1/2"
11 1/8
4 3/8"
7 3/4"