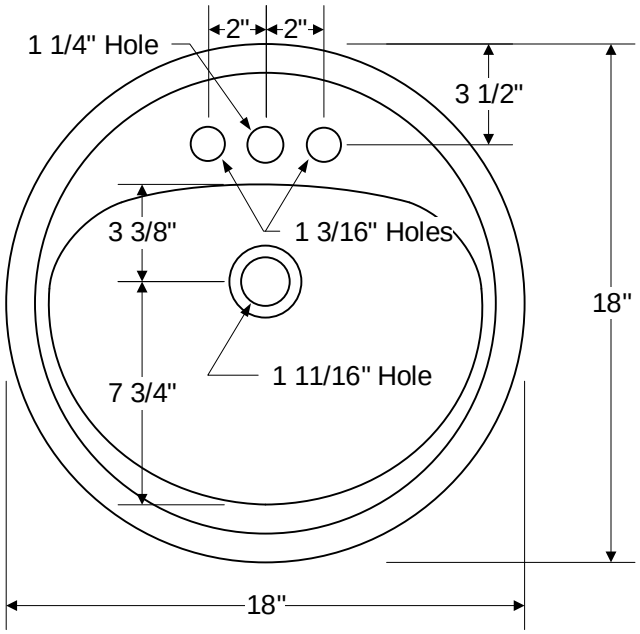
1 1/4" Hole
2"
2"
3 1/2"
3 3/8"
1 3/16" Holes
18"
1 11/16" Hole
7 3/4"
18"

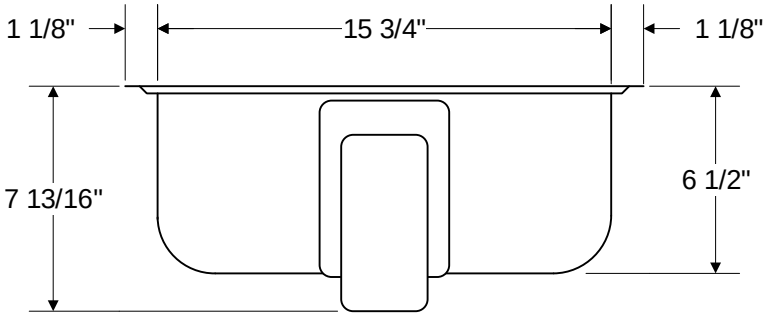
1 1/8"
15 3/4"
1 1/8"
7 13/16"
6 1/2"

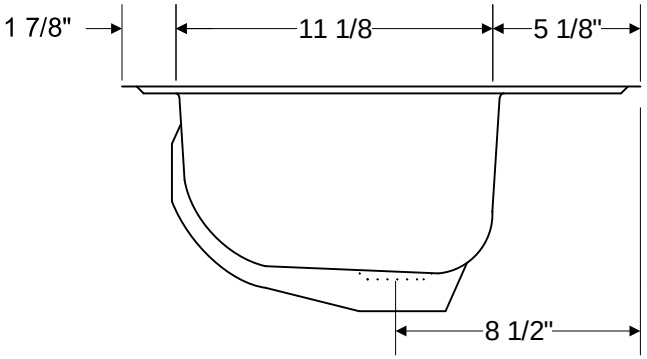
1 7/8"
11 1/8
5 1/8"
8 1/2"