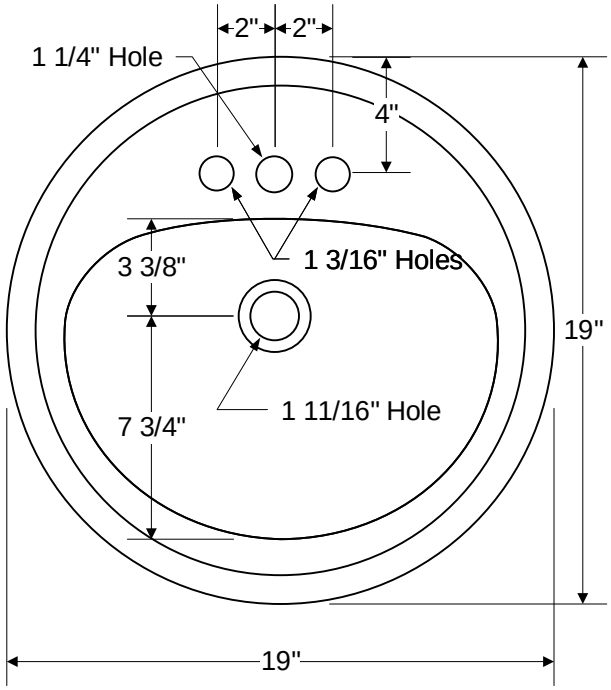
2"
2"
1 1/4" Hole
4"
3 3/8"
1 3/16" Holes
19"
7 3/4"
1 11/16" Hole
19"

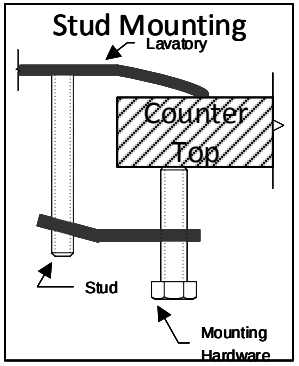
Stud Mounting
Lavatory
Counter Top
Stud
Mounting Hardware

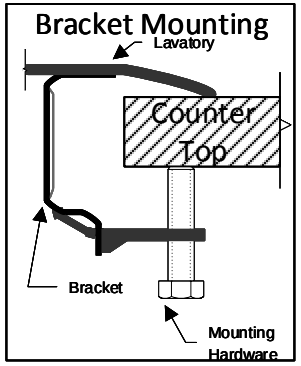
Bracket Mounting
Lavatory
Counter Top
Bracket
Mounting Hardware

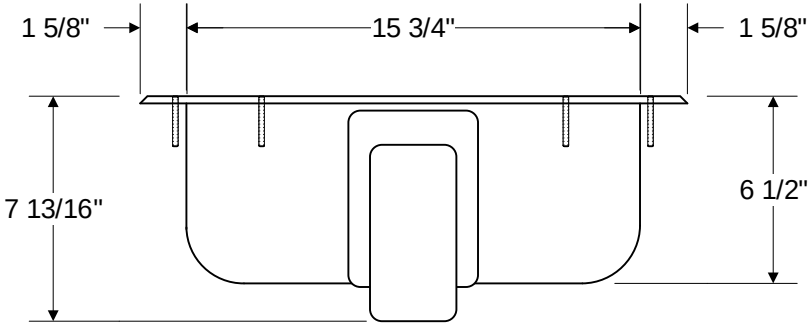
1 5/8"
15 3/4"
1 5/8"
7 13/16"
6 1/2"

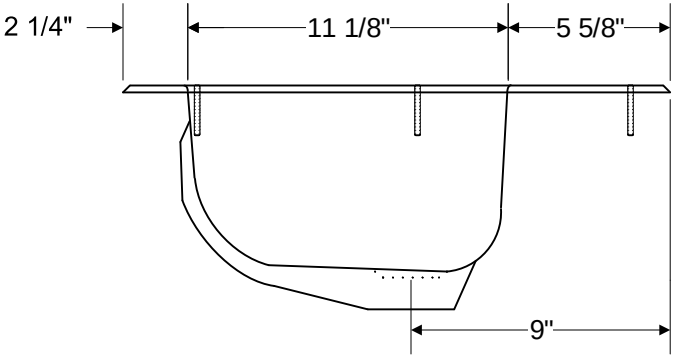
2 1/4"
11 1/8"
5 5/8"
9"