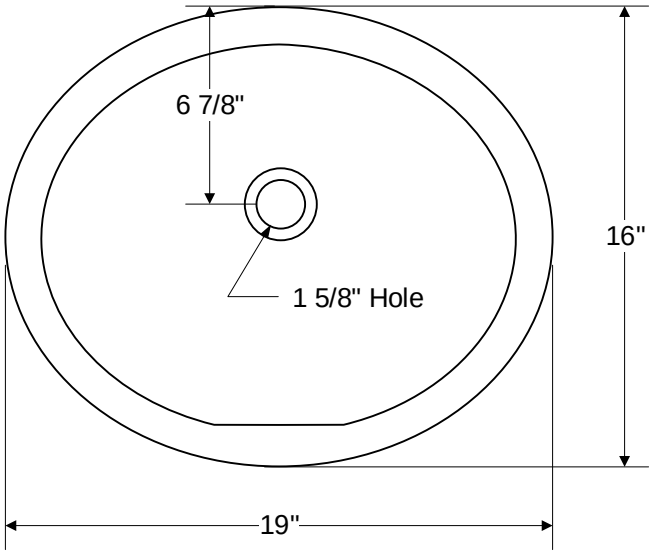
6 7/8"
16"
1 5/8" Hole
19"

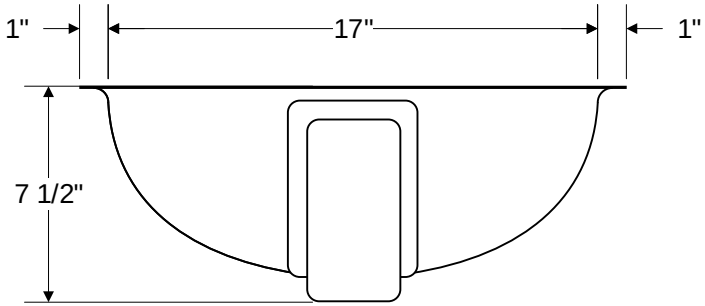
1"
17"
1"
7 1/2"

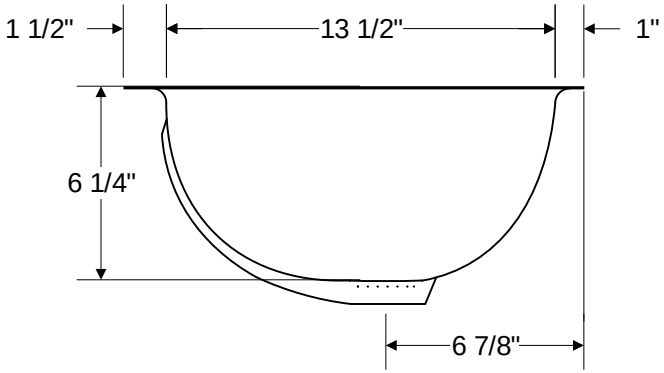
1 1/2"
13 1/2"
1"
6 1/4"
6 7/8"